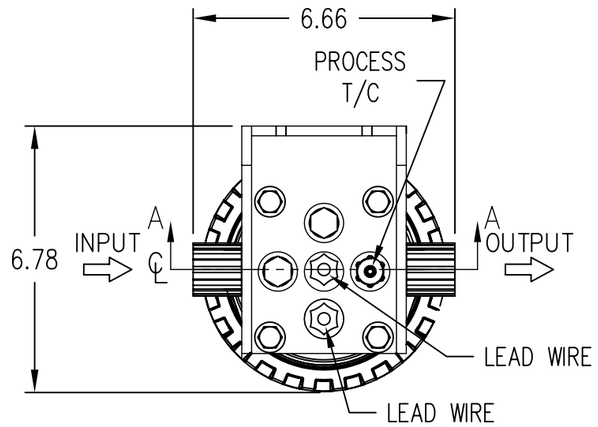

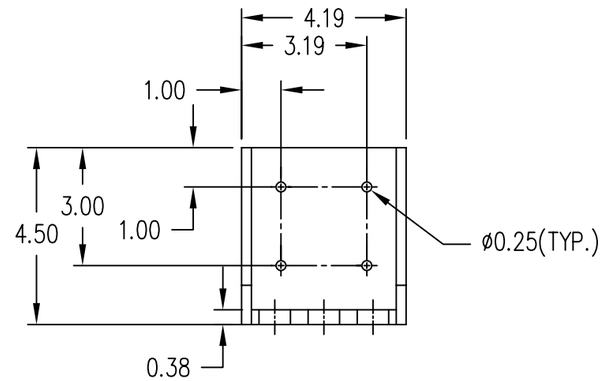

MOUNTING BRACKET

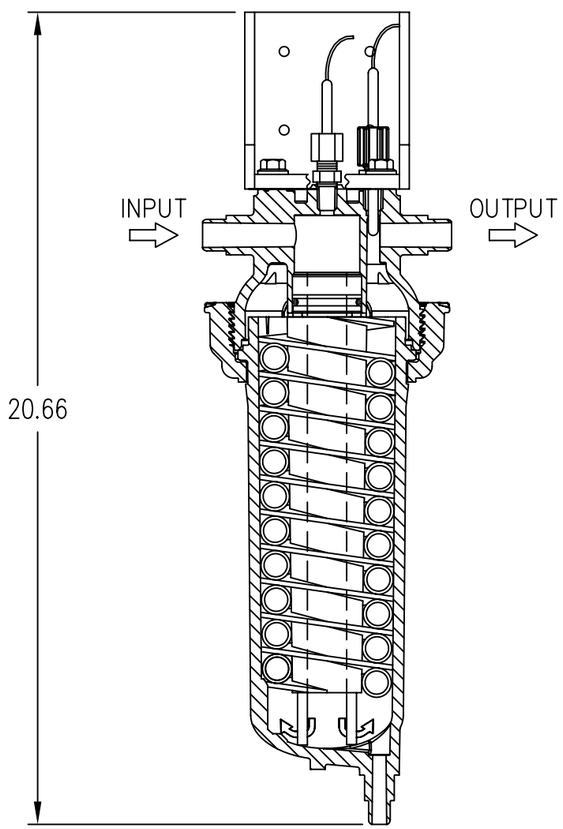

SECTION A–A

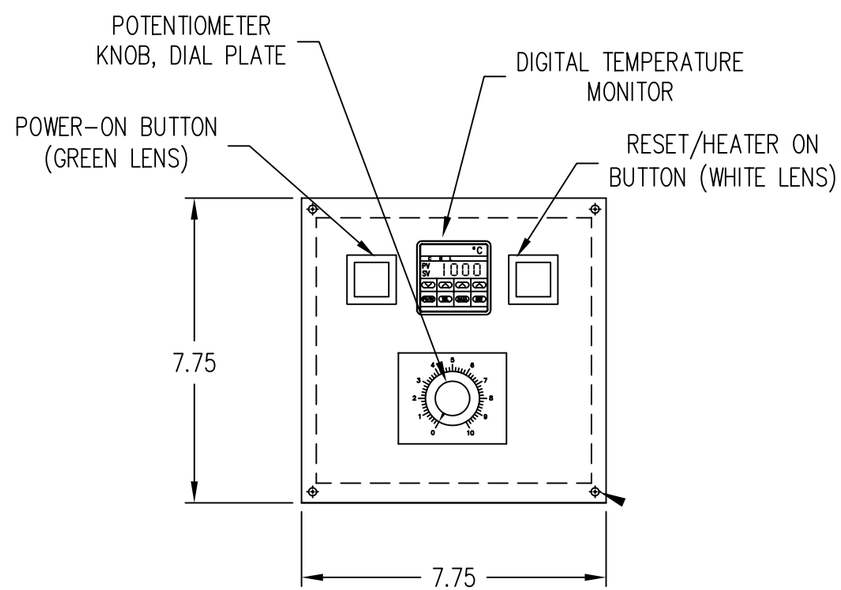

CONTROL BOX ASSY.

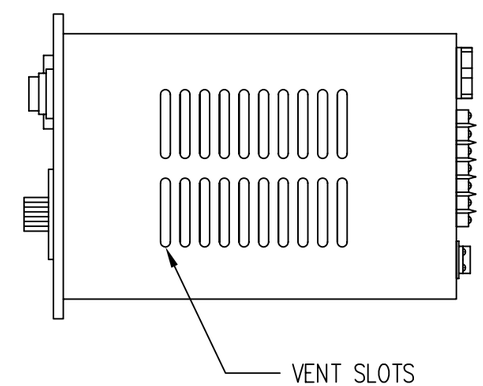

CONFIDENTIALITY	UNLESS OTHERWISE NOTED	HEATEFLEX CORPORATION
THIS DRAWING & THE INFORMATION CONTAINED THEREIN IS CONFIDENTIAL & PROPRIETARY TO INTEGRATED CIRCUIT DEVELOPMENT CORPORATION & MAY NOT BE TRACED, PHOTOGRAPHED, REPRODUCED IN ANY MANNER, NOR USED FOR ANY PURPOSE WHATSOEVER WITHOUT THE EXPRESS WRITTEN AUTHORIZATION OF INTEGRATED CIRCUIT DEVELOPMENT CORPORATION.	DIMENSIONS & TOLERENCING ARE IN INCHES(Millimeters) & PER ANSI–Y14.5 & ICD/HEATEFLEX DRAFTING STANDARDS. DECIMALS: in mm .XX ± 0.01 ± 0.25 .XXX ± 0.005 ± 0.127 .XXXX ± 0.0005 ± 0.0127 X/XX ± 1/32 ∠ ± 0.5° ± 0.5°	405 E. SANTA CLARA, ARCADIA, CA 91006 TEL: (626) 599–8566 FAX: (626) 599–9567
		TITLE: GAS HEATER ASSY., PFA
DRAWN BY: A. Hansen DATE: 01/06/06	ENG/DSGN: DATE:	DWG. NO.: GASPFAHTR REV. 00
DRAFTING QC: DATE:	APPROVED BY DATE:	B SHEET: 1 OF 1 SCALE: NONE FILE: GASPFAHTR